TUBULAR GOODS FRAME BASE SASH A BF-1a

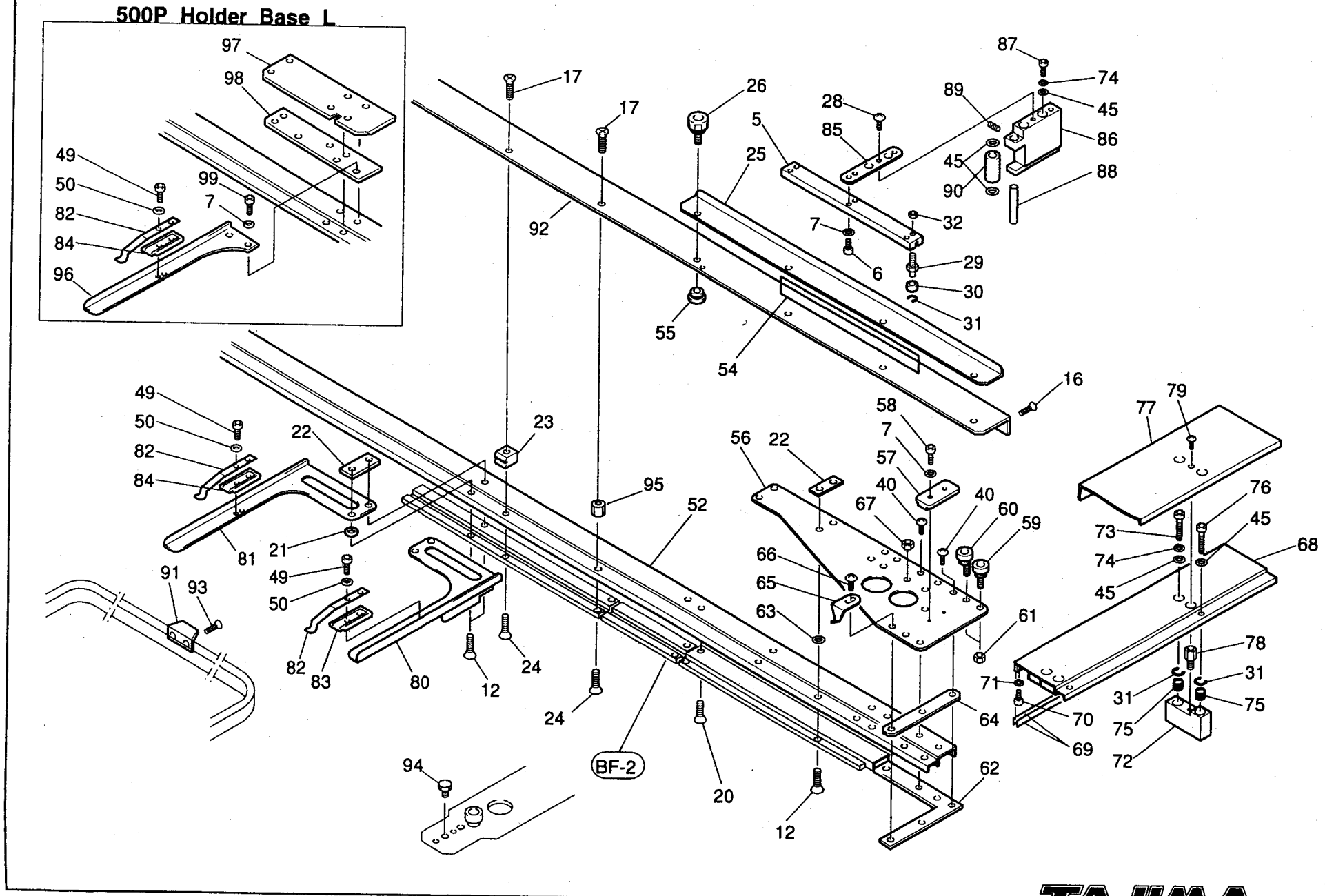

TAJIMA

(951.

TUBULAR GOODS FRAME BASE SASH A

Ref No.	Description	Part No.	Remark	Ref No.	Description	Part No.	Remark
5	Float-preventive Arm	BF0104010000		60	Eccentric Bearing Pin	HF0141000000	
6	Hexagon Socket Head Cap Screw	SS6204060TN0	M4*6L	61	Hexagon Nut		M6 Type 3
7	Plain Washer		M4	62	Right Corner L	BF0142000000	
12	Countersunk Head Screw	SS1104220SD0	M4*22L	63	Spacer A	BF0143000000	
16	Countersunk Head Screw	SS1103080SD0	M3*8L	64	Spacer B	BF0144000000	
17	Countersunk Head Screw	SS1104100SD0	M4*10L	65	Embroidery Space Indicator	BF0150000000	
20	Countersunk Head Screw	SS1104120SD0	M4*12L	66	Truss Head Screw	SS0105120SD0	M5*12L
21	Spacer Collar	BF0119000000		67	Spacer Nut B	BF0151000000	
22	Nut Plate	BF0120000000		68	Z-spec. Frame Sash	BF0145000000	
23	Stud Nut A	BF1238000000	360P	69	Rail Plate Z	BF0146000000	
23	Stud Nut B	BF1239000000	500P	70	Hexagon Socket Head Cap Screw	SS6203050TN0	M3*5L
24	Countersunk Head Screw	SS1104200SD0	M4*20L	71	Spring Washer		M3
25	Float-preventive Frame Sash	BF0122020****		72	Z-spec. Frame Sash Stud	BF0147000000	
26	Knurled Screw	EF0306000000		73	Z-spec. Frame Sash Fixing Bolt A	HF1117000000	
28	Truss Head Screw	SS0104160SD0	M4*16L	74	Spring Washer		M5
29	Roller Pin	HF0123010000		75	Return Spring	HF0131000000	
30	Bearing	BPL1040ZZ000		76	Z-spec. Frame Sash Fixing Bolt C	HF0139000000	
31	E-ring	BPE4000000000		77	Z-spec. Frame Sash Cover	BF0148000000	
32	Hexagon Nut		M4	78	Z-spec. Frame Sash Cover Stud	BF0149000000	
40	Truss Head Screw	SS0105100SD0	M5*10L	79	Truss Head Screw	SS0105080SD0	M5*8L
45	Plain Washer		M5	80	Holder Base R Set	BFR1520100000	
49	Hexagon Socket Head Cap Screw	SS6203080TP0	M3*8L	81	Holder Base L Set	BFL1520100000	360P
50	Plain Washer		M3	82	Frame Presser Spring	BF1318010000	
52	Y-axis Base Sash	BF013600****		83	Positioning Plate A	BF1321A00000	
54	Rail Plate Y	BF013800****		84	Positioning Plate B	BF1321B00000	
55	Screw Ring	EF0303000000		85	Float-preventive Bracket	BF0153000000	
56	Z-spec. Roller Base	BF0140000000		86	Float-preventive Stud	BF0154000000	
57	Z-spec. Roller Float-preventive Bracket	BF0141000000		87	Hexagon Socket Head Cap Screw	SS6205500TN1	M5*50L
58	Hexagon Socket Head Cap Screw	SS6204150TN0	M4*15L	88	Fixing Shaft	BF0155000000	
59	Bearing Pin B	EG0779010000		89	Hollow Set Screw	SS8204050TN0	M4*5L

Note: As for parts with marks # or *, please follow our instructions on Table of Contents, in your parts order.

TUBULAR GOODS FRAME BASE SAS

Ref.No.	Description	Part No.	Remark	Ref.No.	Description	Part No.	Remark
90	Fixing Roller	BF015600000					
91	Anti-vibration Metal	BF0215000000	30*30				
91	Anti-vibration Metal	BF1230000000	335*329				
91	Anti-vibration Metal	BF1245000000	45*32				
92	Y-axis Angle	BF013700****	360P				
92	Y-axis Angle	BF016500****	500P				
93	Countersunk Head Screw	SS1103060SD0	M3*6L				
94	Spacer Pin	HC0715000000					
95	Spacer Nut	BF0134000000					
96	Holder Base L Set	BF0169000000	500P				
97	Holder Bracket A	BF0167000000	500P				
98	Holder Bracket B	BF0168000000	500P				
99	Hexagon Socket Head Cap Screw	SS6204060TP0	M4*6L 500P				

Note: As for parts with marks # or *, please follow our instructions on Table of Contents, in your parts order.

TUBULAR GOODS FRAME BASE SASH B (18H 360P) BF-1b

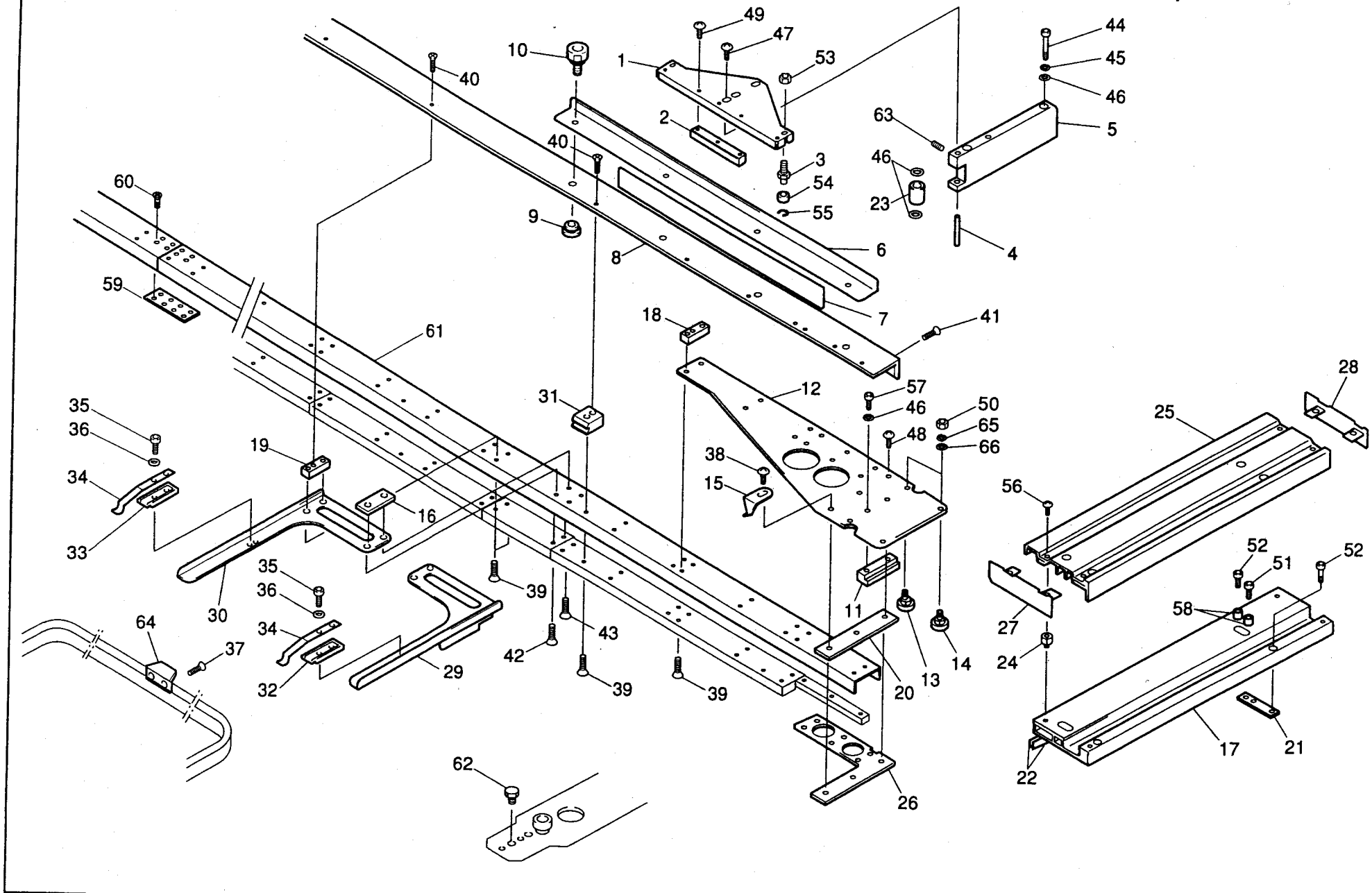

TAJIMA

TUBULAR GOODS FRAME BASE SASH B (18H 360P)

BF-1b

Ref No.	Description	Part No.	Remark	Ref No.	Description	Part No.	Remark
1	Float-preventive Arm	BF0104020000		31	Stud Nut	BF1120000000	
2	Guide Block	BF1111000000		32	Positioning Plate A	BF1321A00000	
3	Roller Pin	HF0123010000		33	Positioning Plate B	BF1321B00000	
4	Fixing Shaft	BF0155000000		34	Frame Presser Spring	BF1318010000	
5	Float-preventive Stud	BF0154010000		35	Hexagon Socket Head Cap Screw	SS6203080TP0	M3*8L
6	Float-preventive Frame Sash	BF0122020000		36	Plain Washer		M3
7	Rail Plate Y1	BF0138000000		37	Countersunk Head Screw	SS1103060SD0	M3*6L
8	Y-axis Angle	BF1117000000		38	Truss Head Screw	SS0105120SD0	M5*12L
9	Screw Ring	EF0303000000		39	Countersunk Head Screw	SS1104250SD0	M4*25L
10	Knurled Screw	EF0306000000		40	Countersunk Head Screw	SS1104100SD0	M4*10L
11	Z-spec. Roller Float-preventive Bracket	BF0141010000		41	Countersunk Head Screw	SS1103100SD0	M3*10L
12	Z-spec. Roller Base	BF0140010000		42	Countersunk Head Screw	SS1104220SD0	M4*22L
13	Eccentric Z-spec. Roller	BF1102000000		43	Countersunk Head Screw	SS1104140SD0	M4*14L
14	Z-spec. Roller	BF1101000000		44	Hexagon Socket Head Cap Screw	SS6205500TN0	M5*50L
15	Embroidery Space Indicator	BF0150000000		45	Spring Washer		M5
16	Nut Plate	BF0120000000		46	Plain Washer		M5
17	Z-spec. Frame Sash	BF0145010000		47	Truss Head Screw	SS0106100SD0	M6*10L
18	Reinforcing Spacer B	BF1119000000		48	Truss Head Screw	SS0105100SD0	M5*10L
19	Reinforcing Spacer	BF1118000000		49	Truss Head Screw	SS0104120SD0	M4*12L
20	Spacer	BF1104000000		50	Hexagon Nut		M6
21	Z-spec. Frame Sash Stud	BF0147010000		51	Hexagon Socket Head Cap Screw	SS6205120TN0	M5*12L
22	Rail Plate Z	BF0146010000		52	Hexagon Socket Head Cap Screw	SS6205220TN0	M5*22L
23	Fixing Roller	BF0156000000		53	Hexagon Nut		M4
24	Z-spec. Frame Sash Cover Stud	BF0149010000		54	Bearing	BPL1040ZZ000	
25	Z-spec. Frame Sash Cover	BF0148010000		55	E-ring	BPE4000000000	
26	Right Corner L	BF1121000000		56	Truss Head Screw	SS0105080SD0	M5*8L
27	Side Cover R	BF1123000000		57	Hexagon Socket Head Cap Screw	SS6205150TN0	M5*15L
28	Side Cover L	BF1122000000		58	Screw Bushing	WH0121000000	
29	Holder Base R Set	BFR1520300000		59	Joint Plate	BF1103000000	
30	Holder Base L Set	BFL1520300000		60	Countersunk Head Screw	SS1105060SD0	M5*6L

Note: As for parts with marks # or *, please follow our instructions on Table of Contents, in your parts order.

TUBULAR GOODS FRAME BASE SASH B (18H 360P)

BF-1b

Ref No.	Description	Part No.	Remark	Ref No.	Description	Part No.	Remark
61	Y-axis Base Sash	BF1116000000					
62	Spacer Pin	HC0715000000					
63	Hollow Set Screw	SS820405 0TN0	M4*5L				
64	Anti-vibration Metal	BF0215000000	30*30				
64	Anti-vibration Metal	BF1230000000	335*329				
64	Anti-vibration Metal	BF1245000000	45*32				
65	Spring Washer		M6				
66	Plain Washer		M6				

Note: As for parts with marks # or *, please follow our instructions on Table of Contents, in your parts order.

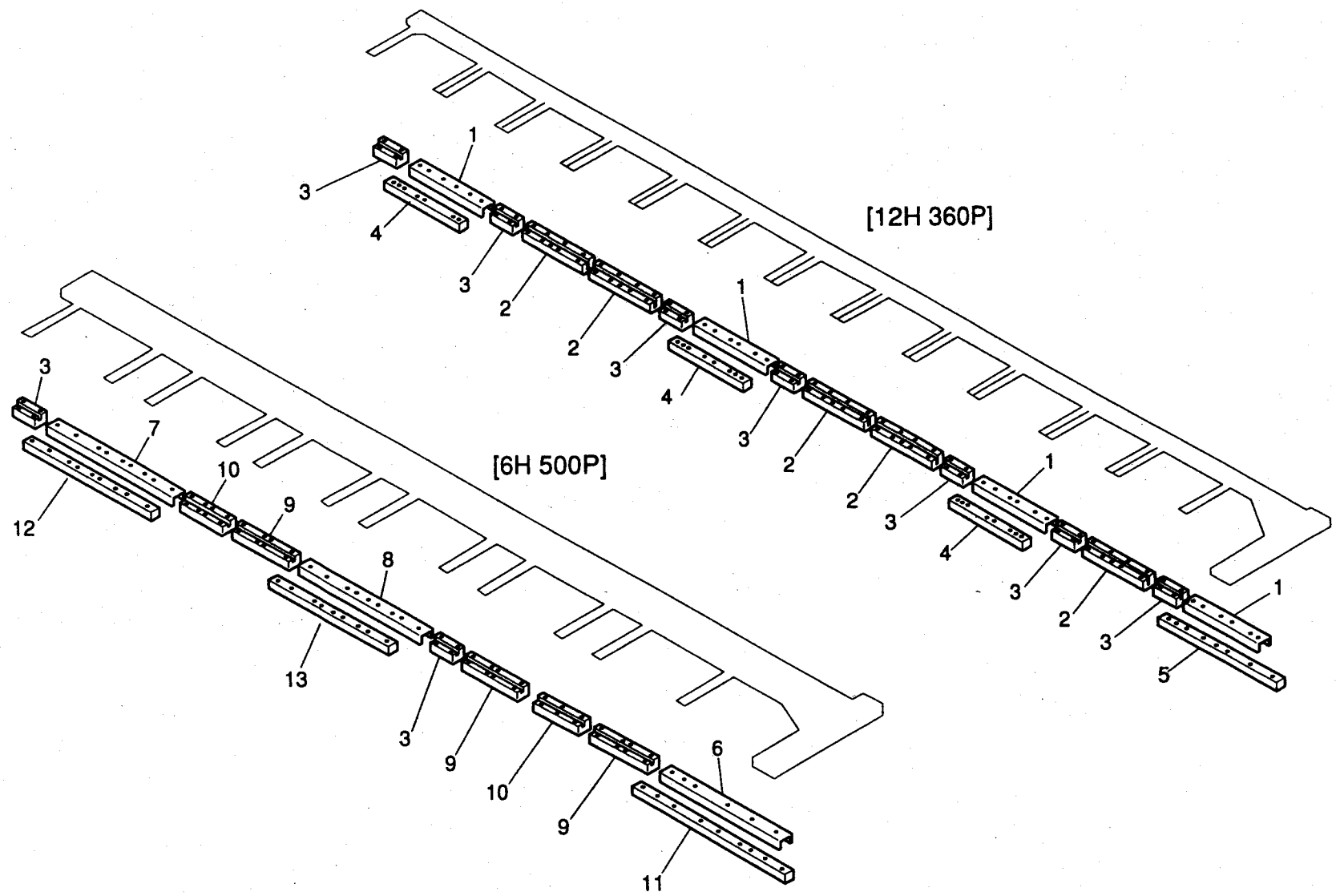
[12H 360P]
[6H 500P]
1
2
3
4
5
6
7
8
9
10
11
12
13

Y-AXIS FRAME SASH HOLDER & RAIL A

BF-2a

f No.	Description	Part No.	Remark	Ref No.	Description	Part No.	Remark
1	Y-axis Frame Sash Rail A1	BF0118000000	L=449				
2	Y-axis Frame Sash Holder A1	BF0106110000	L=359				
3	Y-axis Frame Sash Holder A2	BF0106210000	L=134				
4	Y-axis Frame Sash Holder B1	BF0107110000	L=449				
5	Y-axis Frame Sash Holder B2	BF0139000000	L=582				
6	Y-axis Frame Sash Rail A4	BF0163000000	L=589				
7	Y-axis Frame Sash Rail A5	BF0118500000	L=636.5				
8	Y-axis Frame Sash Rail A6	BF0118600000	L=589				
9	Y-axis Frame Sash Holder A5	BF0106510000	L=274				
10	Y-axis Frame Sash Holder A6	BF0106610000	L=224				
11	Y-axis Frame Sash Holder B5	BF0164000000	L=722				
12	Y-axis Frame Sash Holder B7	BF0107700000	L=636.5				
13	Y-axis Frame Sash Holder B8	BF0107800000	L=589				

Note: As for parts with marks # or *, please follow our instructions on Table of Contents, in your parts order.

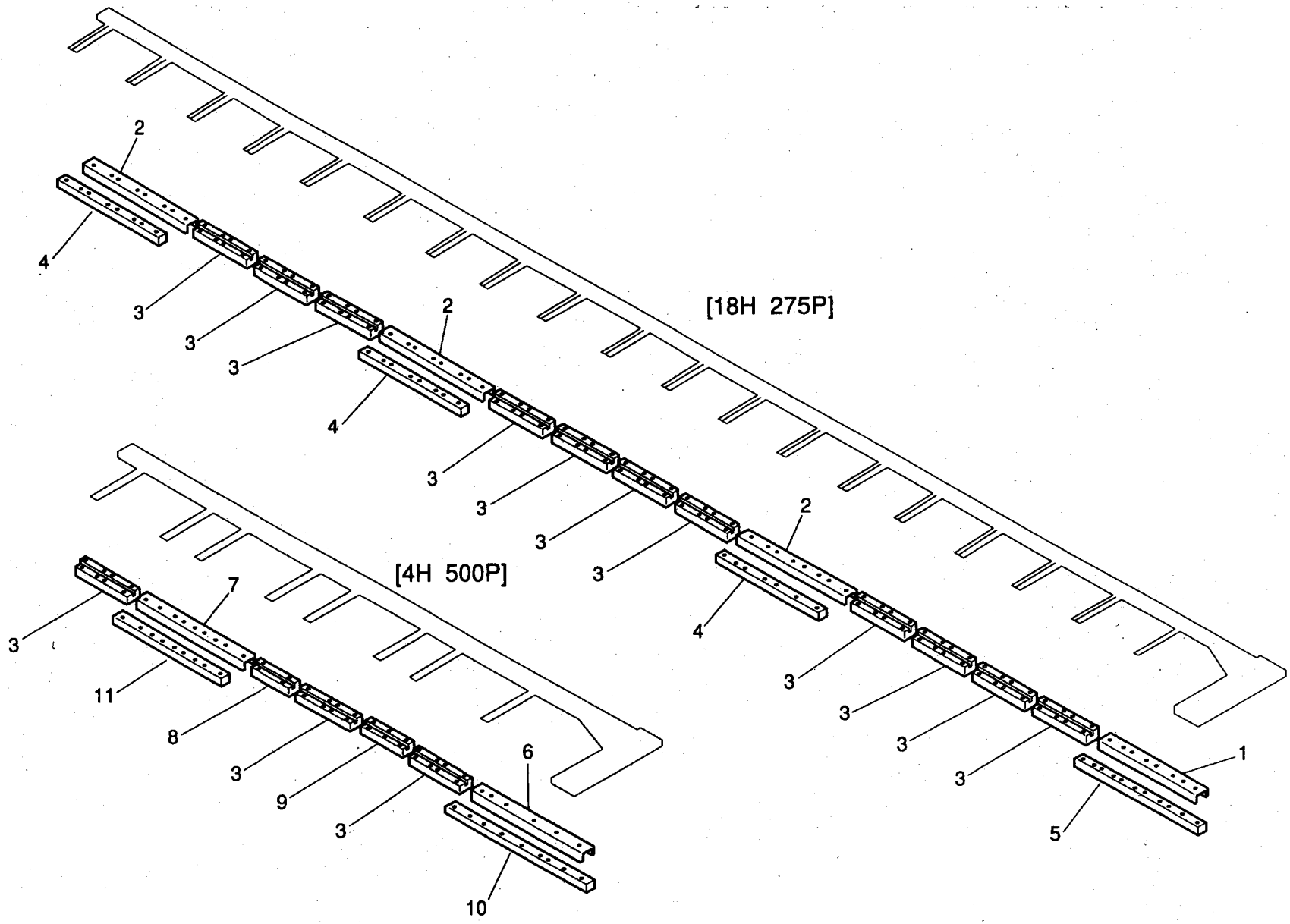
[18H 275P]
[4H 500P]
1
2
3
4
5
6
7
8
9
10
11

Y-AXIS FRAME SASH HOLDER & RAIL B ASSY

BF-2b

Ref No.	Description	Part No.	Remark	Ref No.	Description	Part No.	Remark
1	Y-axis Frame Sash Rail A2	BF015700000	L=499				
2	Y-axis Frame Sash Rail A3	BF015800000	L=549				
3	Y-axis Frame Sash Holder A5	BF010651000	L=274				
4	Y-axis Frame Sash Holder B3	BF015900000	L=549				
5	Y-axis Frame Sash Holder B4	BF016000000	L=632				
6	Y-axis Frame Sash Rail A4	BF016300000	L=589				
7	Y-axis Frame Sash Rail A6	BF011860000	L=589				
8	Y-axis Frame Sash Holder A2	BF010621000	L=134				
9	Y-axis Frame Sash Holder A6	BF010661000	L=224				
10	Y-axis Frame Sash Holder B5	BF016400000	L=722				
11	Y-axis Frame Sash Holder B8	BF010780000	L=589				

Note: As for parts with marks # or *, please follow our instructions on Table of Contents, in your parts order.

Y-AXIS FRAME SASH HOLDER & RAIL C (18H 360P) BF-2c

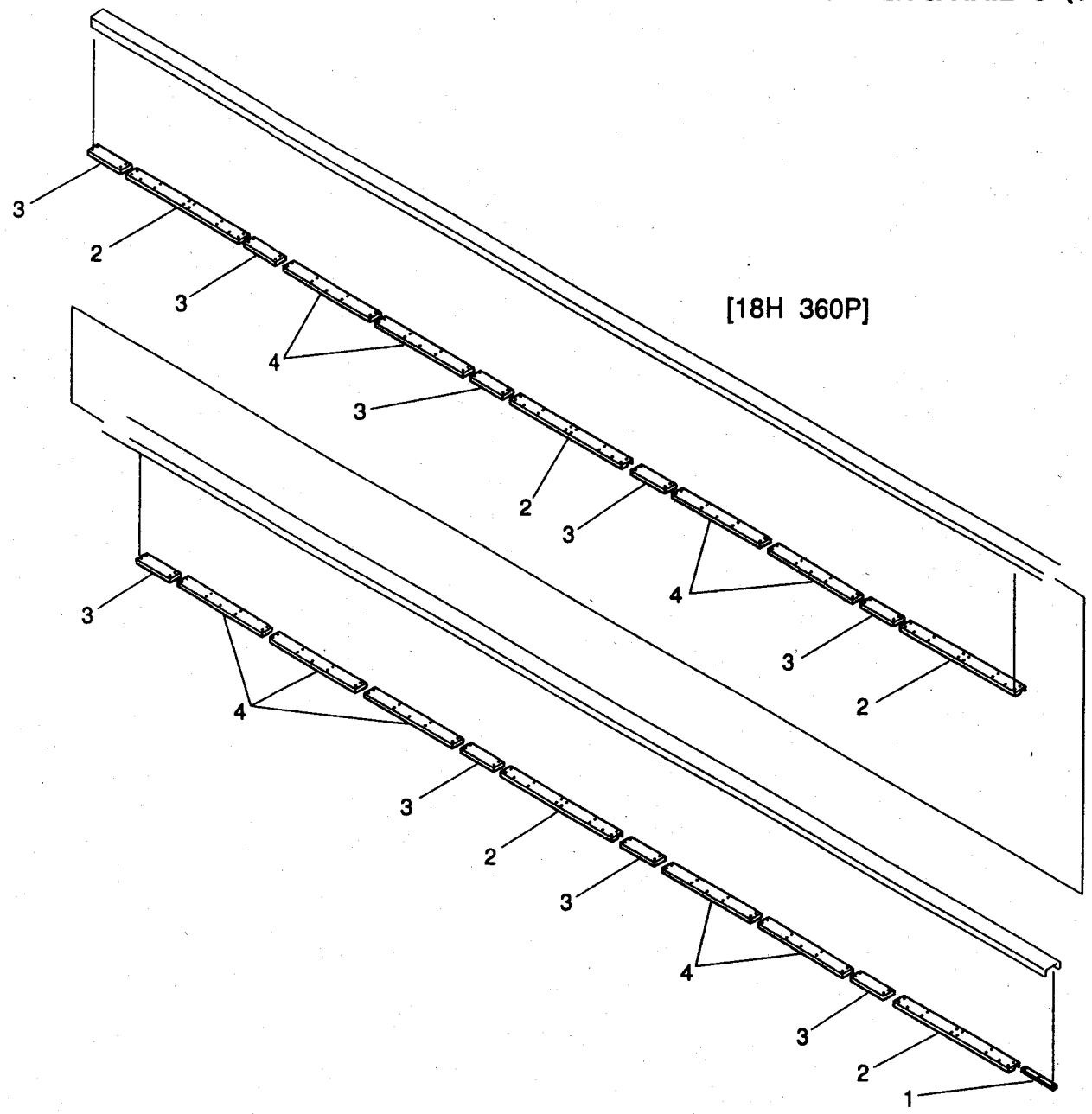

TAJIMA

Y-AXIS FRAME SASH HOLDER & RAIL C (18H 360P)

BF-2c

Ref No.	Description	Part No.	Remark	Ref No.	Description	Part No.	Remark
1	Y-axis Frame Sash Holder A3	BF1113000000					
2	Y-axis Frame Sash Rail A1	BF1115000000					
3	Y-axis Frame Sash Holder A2	BF1112000000					
4	Y-axis Frame Sash Holder A1	BF1114000000					

Note: As for parts with marks # or ∗, please follow our instructions on Table of Contents, in your parts order.